HEKO GROUP
CONVEYOR SOLUTIONS

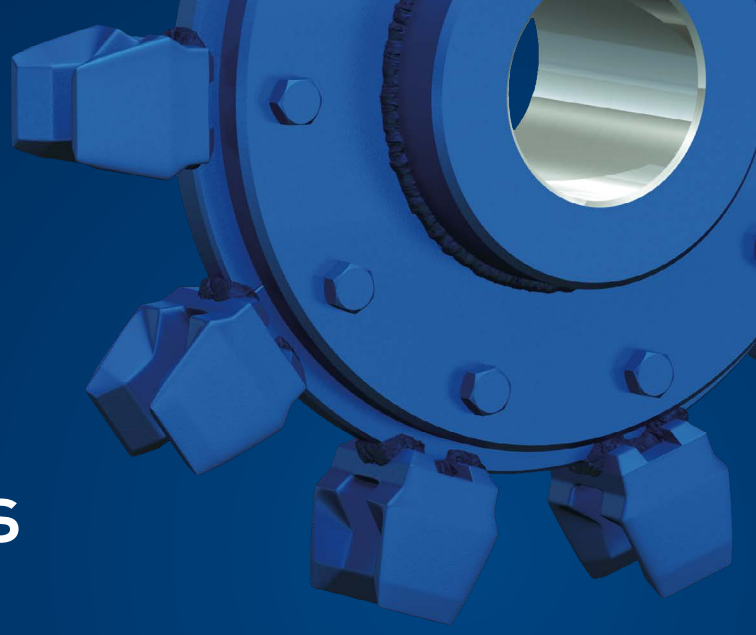

HEKO chain wheels with teeth

HEKO manufactures sprockets in all dimensions and designs. With a large number of sprockets, each sprocket is unique. HEKO adapts to individual customer requirements and manufactures every version to order.

Modern CNC machining centres and automatic lathes are used for mechanical processing of chain wheels, chain rollers, rollers and shafts.

HEKO chain wheels with projecting teeth, in steel, with replaceable rim segments, type GIA-3 and GIA

- Suitable for heavy-duty drives
- Excellent service life due to the hardened contact surface
- Bore diameter and hub length according to customer requirements
- Use with chains according to DIN 764 and WN
- Use with chain brackets, SMO drivers and some special solutions
- Reduced maintenance costs thanks to replaceable sprockets

HEKO chain wheel type GIA-3

HEKO chain wheel type GIA

DB-072_HEKO_Kettenraeder_verzahnt_DE-EN | 26. Aug. 2020, 13:52 | © HEKO Ketten GmbH | Protected by copyright. All rights and changes reserved.

HEKO GROUP
CONVEYOR SOLUTIONS

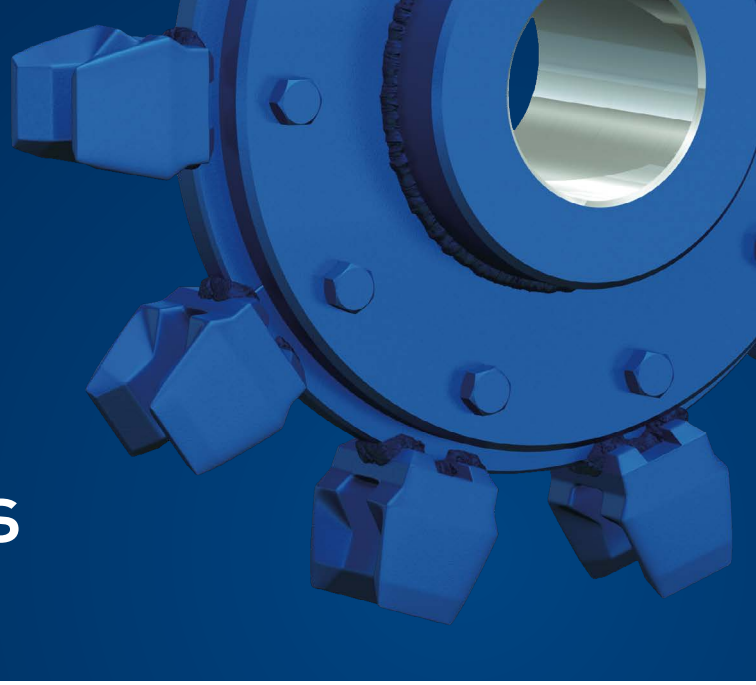

HEKO chain wheels with teeth

Dimensions and technical data for chain wheels with projecting teeth (inside toothed) with replaceable tooth segments, type GIA-3 type GIA-3 and GIA

pitch circle diameter (mm)	to suit chain, nominal x pitch (mm)	DIN	number of teeth	dimensions (mm)			weight ca. (kg/each)	
Tk Ø	d x t			a	b	c	GIA-3	GIA
384	19 x 75	WN	8	20	60	140	51	32
432	19 x 75	WN	9	20	60	140	70	42
479	19 x 75	WN	10	20	60	140	90	52
574	19 x 75	WN	12	20	60	140	125	77
315	20 x 70	764	7	23	63	140	29	22
359	20 x 70	764	8	23	63	140	48	29
403	20 x 70	764	9	23	63	140	60	36
447	20 x 70	764	10	23	63	140	72	43
386	22 x 86	WN	7	25	71	140	54	41
441	22 x 86	WN	8	25	71	140	68	48
495	22 x 86	WN	9	25	71	140	100	52
550	22 x 86	WN	10	25	71	140	127	55
410	23 x 80	764	8	27	73	160	65	51
461	23 x 80	764	9	27	73	160	80	72
511	23 x 80	764	10	27	73	160	95	85
466	26 x 91	764	8	30	80	160	100	75
524	26 x 91	764	9	30	80	160	128	80
582	26 x 91	764	10	30	80	160	146	90
513	26 x 100	WN	8	30	80	160	130	120
576	26 x 100	WN	9	30	80	160	155	135
538	30 x 105	764	8	35	95	200	142	120
605	30 x 105	764	9	35	95	200	182	140
615	30 x 120	WN	8	35	95	200	208	160
691	30 x 120	WN	9	35	95	200	280	190
646	34 x 126	WN	8	35	105	200	220	175
726	34 x 126	WN	9	35	105	200	295	200
697	34 x 136	WN	8	35	105	200	292	190
783	34 x 136	WN	9	35	105	200	380	220
646	36 x 126	764	8	40	110	220	255	190
726	36 x 126	764	9	40	110	220	310	220
738	38 x 144	WN	8	40	110	220	320	
829	38 x 144	WN	9	40	110	220	370	
697	39 x 136	764	8	45	115	220	300	
783	39 x 136	764	9	45	115	220	395	
753	42 x 147	764	8	50	120	220	430	
847	42 x 147	764	9	50	120	220	450	

Other dimensions and qualities on request, WN = works standard

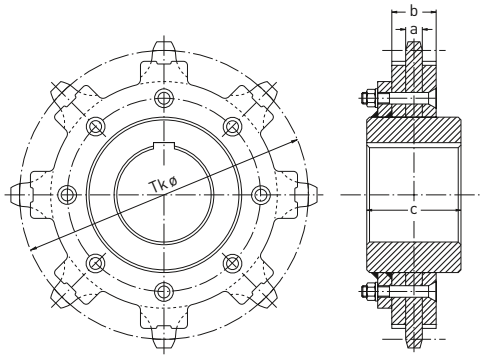

HEKO chain wheel type GIA-3, projecting teeth, replaceable toothed

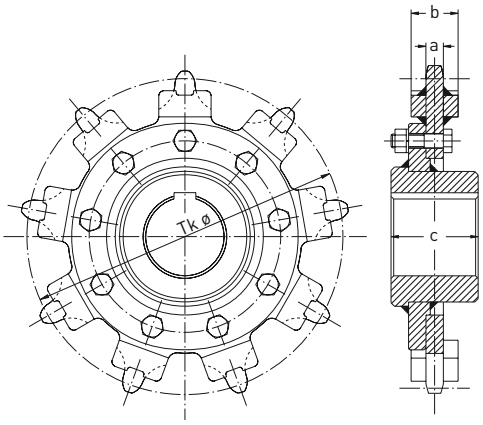

Chain wheel type GIA, projecting teeth, replaceable toothed rim with welded chain support

DB-072_HEKO_Kettenraeder_verzahnt_DE-EN | 26. Aug. 2020, 13:52 | © HEKO Ketten GmbH | Protected by copyright. All rights and changes reserved.

HEKO GROUP
CONVEYOR SOLUTIONS

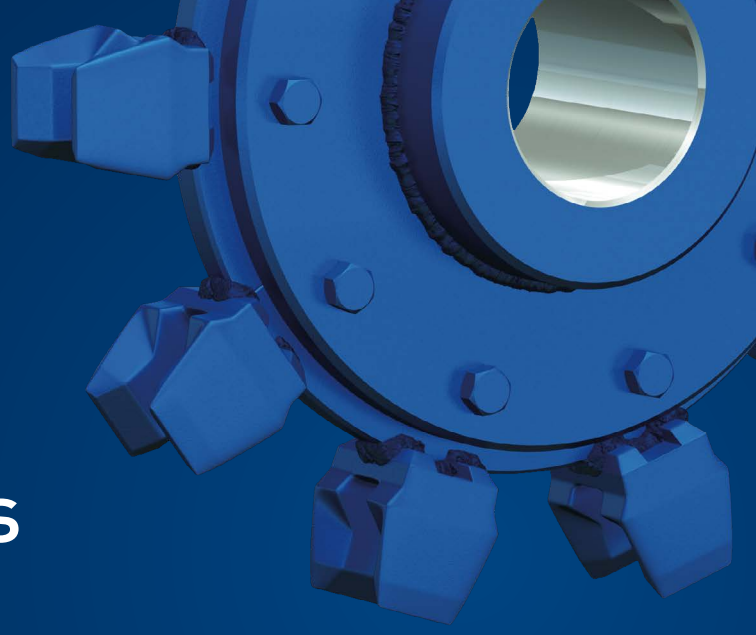

HEKO chain wheels with teeth

HEKO chain wheels, projecting teeth, steel one-parted, type GIE

- Suitable for drive / and reversing at medium loads
- Long service life thanks to wear-resistant hardened chain contact points
- Bore and hub length after customer request
- Use with chains according to DIN 764 and WN
- Use with chain brackets, special links, carriers SMO and some special solutions

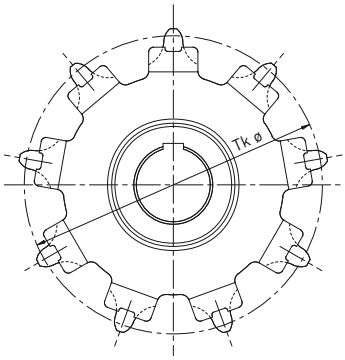

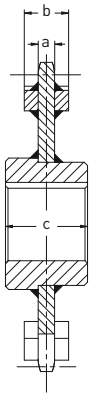

Heko chainwheel type GIE projecting teeth one -parted with welded chain support.

pitch circle diameter (mm) Tk Ø	to suit chain, nominal x pitch (mm) d x t	DIN	number of teeth	dimensions (mm) a	b	c	weight ca. (kg/each)
231	13 x 45	764	8	15	45	100	10
259	13 x 45	764	9	15	45	100	11
288	13 x 45	764	10	15	45	100	13
256	14 x 50	WN	8	15	45	100	13
288	14 x 50	WN	9	15	45	100	14
320	14 x 50	WN	10	15	45	100	18
216	16 x 56	764	6	18	54	100	15
252	16 x 56	764	7	18	54	100	16
287	16 x 56	764	8	18	54	100	18
323	16 x 56	764	9	18	54	100	22
247	16 x 64	WN	6	18	54	100	17
328	16 x 64	WN	8	18	54	100	19
369	16 x 64	WN	9	18	54	100	28
409	16 x 64	WN	10	18	54	100	31
243	18 x 63	764	6	20	60	120	15
283	18 x 63	764	7	20	60	120	17
323	18 x 63	764	8	20	60	120	18
363	18 x 63	764	9	20	60	120	22
290	19 x 75	WN	6	20	60	140	15
384	19 x 75	WN	8	20	60	140	30
479	19 x 75	WN	10	20	60	140	50
574	19 x 75	WN	12	20	60	140	75
315	20 x 70	764	7	23	63	140	20
359	20 x 70	764	8	23	63	140	27
403	20 x 70	764	9	23	63	140	33
332	22 x 86	WN	6	25	71	140	27
386	22 x 86	WN	7	25	71	140	39
441	22 x 86	WN	8	25	71	140	48
550	22 x 86	WN	10	25	71	140	53
410	23 x 80	764	8	27	73	160	50
461	23 x 80	764	9	27	73	160	68
466	26 x 91	764	8	30	80	180	74
524	26 x 91	764	9	30	80	180	78
582	26 x 91	764	10	30	80	180	88
513	26 x 100	WN	8	30	80	180	118
576	26 x 100	WN	9	30	80	180	130

Other dimensions and qualities on request, WN = works standard

DB-072_HEKO_Kettenrauder_verzahnt_DE-EN | 26. Aug. 2020, 13:52 | © HEKO Ketten GmbH | Protected by copyright. All rights and changes reserved.

HEKO GROUP
CONVEYOR SOLUTIONS

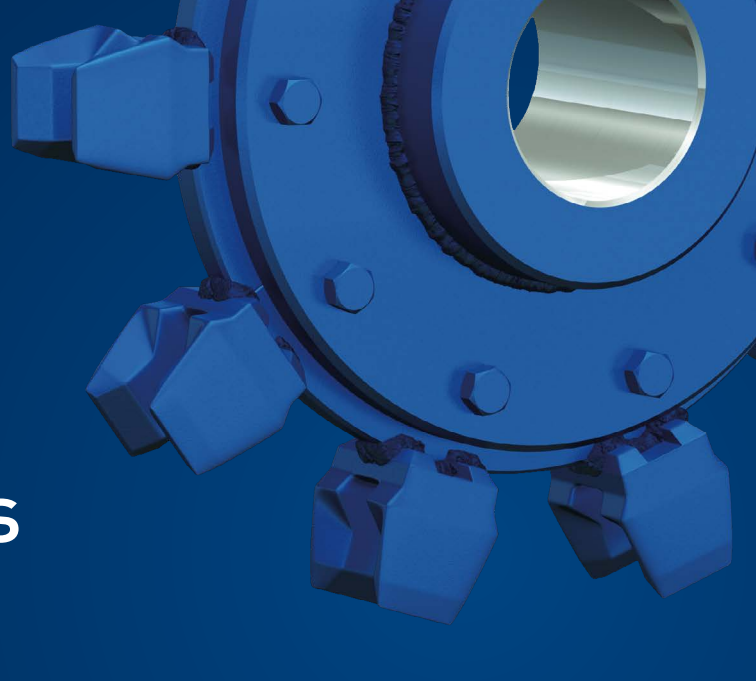

HEKO chain wheels with teeth

HEKO chain wheels, projecting teeth, steel multi-parted exchangeable type RIS/VIA

- Suitable for heavy-duty drives
- Excellent service life due to the hardened contact surface
- Replaceable, wear-resistant individual teeth or toothed segments
- Mid-wear-teeth for worn chain possible
- Can be manufactured to suit existing hubs
- Can be supplied as a complete assembly

HEKO chain wheel type RIS

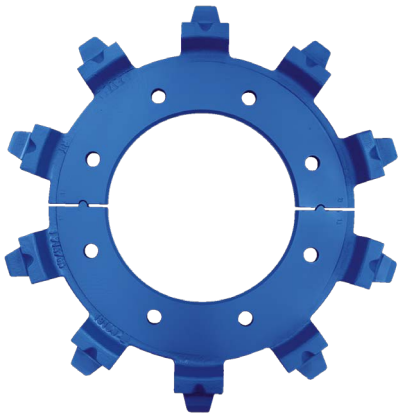

HEKO toothed rim type VIA

HEKO single tooth type RIS

pitch circle diameter (mm) Tk Ø	to suit chain, nominal x pitch (mm) d x t	DIN	number of teeth	dimensions (mm) a	b	c	weight ca. (kg/each)
615	30 x 120	WN	8	32	98	200	190
691	30 x 120	WN	9	32	98	200	210
767	30 x 120	WN	10	32	98	200	290
697	34 x 136	WN	8	40	110	220	220
783	34 x 136	WN	9	40	110	220	260
869	34 x 136	WN	10	40	110	220	300

Other dimensions and qualities on request, WN = works standard

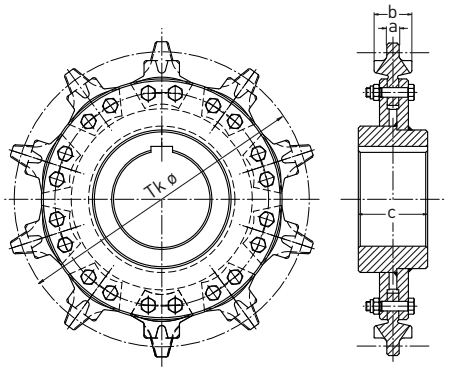

HEKO chain wheel type RIS/VIA projecting teeth exchangeable

DB-072_HEKO_Kettenraeder_verzahnt_DE-EN | 26. Aug. 2020, 13:52 | © HEKO Ketten GmbH | Protected by copyright. All rights and changes reserved.

HEKO GROUP
CONVEYOR SOLUTIONS

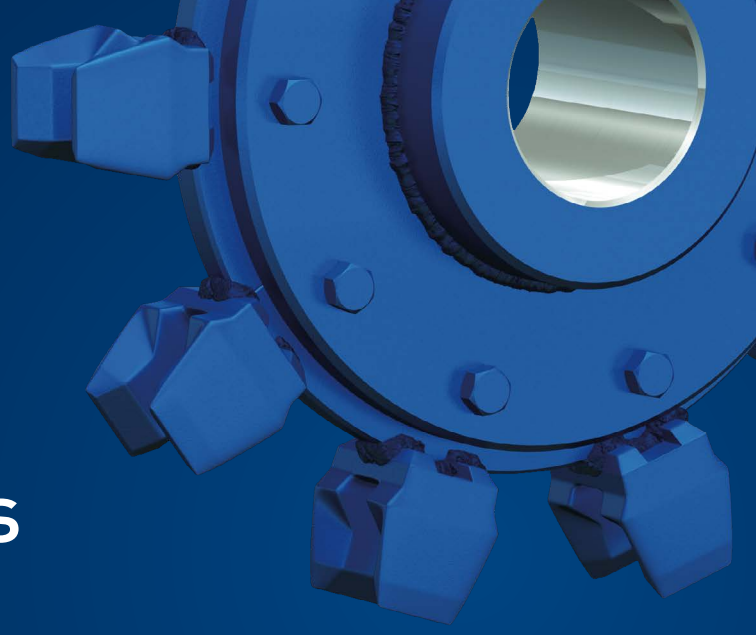

HEKO chain wheels with teeth

HEKO chain wheels, projecting teeth, steel multi-parted exchangeable, type VIA und VIA-C

- Suitable for drive / reversing at medium loads
- Long service life due to wear-resistant hardened chain contact points
- Bore and hub length according to customer requirements
- Use with chains according to DIN 764 and WN
- Use with chain brackets, special links, SMO flights and some special solutions
- Reduced maintenance costs due to replaceable sprockets
- Due to the chamfered outlet openings (Type VIA-C) increased self-cleaning effect with very caking conveyed goods

pitch circle diameter (mm) Tk Ø	to suit chain, nominal x pitch (mm) d x t	DIN	number of teeth	dimensions (mm) a	b	c	weight ca. (kg/each)
179	10 x 35	764	8	11.5	34	60	4
202	10 x 35	764	9	11.5	34	60	7
224	10 x 35	764	10	11.5	34	60	8
231	13 x 45	764	8	15	45	100	10
259	13 x 45	764	9	15	45	100	16
288	13 x 45	764	10	15	45	100	18
256	14 x 50	WN	8	15	45	100	16
288	14 x 50	WN	9	15	45	100	16
320	14 x 50	WN	10	15	45	100	22
287	16 x 56	764	8	18	50	100	18
323	16 x 56	764	9	18	50	100	25
247	16 x 64	WN	6	18	50	100	14
328	16 x 64	WN	8	18	50	100	28
369	16 x 64	WN	9	18	50	100	32
409	16 x 64	WN	10	18	50	100	38
243	18 x 63	764	6	20	55	120	10
283	18 x 63	764	7	20	55	120	17
323	18 x 63	764	8	20	55	120	22
363	18 x 63	764	9	20	55	120	31
384	19 x 75	WN	8	20	60	140	28
479	19 x 75	WN	10	20	60	140	41
574	19 x 75	WN	12	20	60	140	56
315	20 x 70	764	7	23	60	140	27
359	20 x 70	764	8	23	60	140	38
403	20 x 70	764	9	23	60	140	50
332	22 x 86	WN	6	23	69	140	35
386	22 x 86	WN	7	23	69	140	45
441	22 x 86	WN	8	23	69	140	55
550	22 x 86	WN	10	23	69	140	80

Other dimensions and qualities on request, WN = works standard

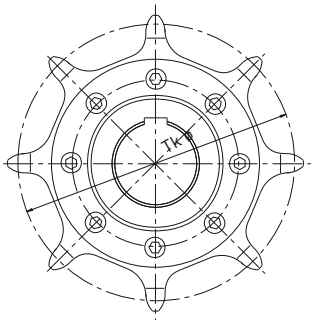

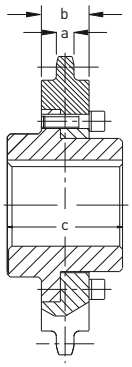

Interchangeable HEKO sprocket type VIA or VIA-C with slanted outlet openings

DB-072_HEKO_Kettenraeder_verzahnt_DE-EN | 26. Aug. 2020, 13:52 | © HEKO Ketten GmbH | Protected by copyright. All rights and changes reserved.

HEKO chain wheels, projecting teeth, steel one-parted exchangeable type VIE and VIE-C

- Suitable for drive / reversing for medium and low loads
- Long service life thanks to wear-resistant hardened chain contact points
- Bore and hub length according to customer requirements
- Use with chains according to DIN 764 and WN
- Use with chain brackets, special links, SMO drivers and some special solutions
- Increased due to the chamfered outlet openings (type VIE-C / D)
- self-cleaning effect with heavily caking materials

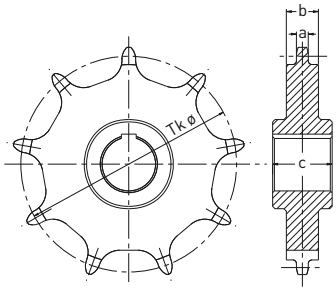

HEKO sprocket type VIE-A projecting toothed, one-piece sprocket with machined chain support made entirely of alloyed CrMo steel

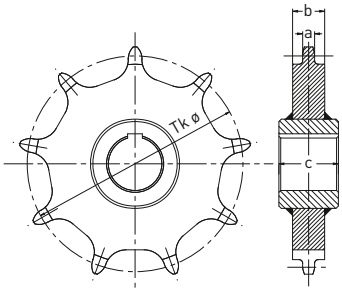

HEKO sprocket type VIE-B one-piece, projecting toothed, welded sprocket with mechanically machined chain support, hub made from mild steel, sprocket made of alloyed CrMo steel

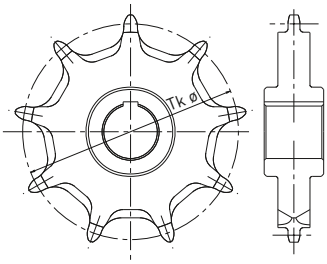

HEKO sprocket type VIE-C and VIE-D with chamfered outlet openings, machined from solid or in welded execution (alternative to VIE-A and VIE-B)

pitch circle diameter (mm) Tk Ø	to suit chain, nominal x pitch (mm) d x t	DIN	number of teeth	dimensions (mm) a	b	c	weight ca. (kg/each)
164	4 x 32	763	8	5	18	40	2
205	4 x 32	763	10	5	18	40	2.2
245	4 x 32	763	12	5	18	40	2.4
179	5 x 35	763	8	7	20	40	2
224	5 x 35	763	10	7	20	40	2.4
268	5 x 35	763	12	7	20	50	2.6
162	6 x 42	763	6	9	23	50	2.2
215	6 x 42	763	8	9	23	50	3
268	6 x 42	763	10	9	23	50	3.5
139	8 x 31	WN	7	8	26	50	4
159	8 x 31	WN	8	8	26	50	5
198	8 x 31	WN	10	8	26	50	6
395	8 x 31	WN	20	8	26	50	9
135	10 x 35	764	6	12	34	60	4
157	10 x 35	764	7	12	34	60	4
179	10 x 35	764	8	12	34	60	5
202	10 x 35	764	9	12	34	60	8
224	10 x 35	764	10	12	34	60	9
290	10 x 35	764	13	12	34	60	14
202	13 x 45	764	7	15	44	100	9
231	13 x 45	764	8	15	44	100	10
259	13 x 45	764	9	15	44	100	15
288	13 x 45	764	10	15	44	100	18
193	14 x 50	WN	6	15	44	100	8
256	14 x 50	WN	8	15	44	100	14

pitch circle diameter (mm) Tk Ø	to suit chain, nominal x pitch (mm) d x t	DIN	number of teeth	dimensions (mm) a	b	c	weight ca. (kg/each)
288	14 x 50	WN	9	15	44	100	19
320	14 x 50	WN	10	15	44	100	22
216	16 x 56	764	6	18	50	100	13
287	16 x 56	764	8	18	50	100	17
323	16 x 56	764	9	18	50	100	24
247	16 x 64	WN	6	18	50	100	15
328	16 x 64	WN	8	18	50	100	20
369	16 x 64	WN	9	18	50	100	24
409	16 x 64	WN	10	18	50	100	28
243	18 x 63	764	6	20	55	120	15
283	18 x 63	764	7	20	55	120	17
323	18 x 63	764	8	20	55	120	22
363	18 x 63	764	9	20	55	120	27
384	19 x 75	WN	8	20	60	140	27
479	19 x 75	WN	10	20	60	140	40
574	19 x 75	WN	12	20	60	140	55
315	20 x 70	764	7	23	64	140	25
359	20 x70	764	8	23	64	140	36
403	20 x 70	764	9	23	64	140	47
332	22 x 86	WN	6	23	69	140	35
386	22 x 86	WN	7	23	69	140	45
441	22 x 86	WN	8	23	69	140	55
550	22 x 86	WN	10	23	69	140	80

Other dimensions and qualities on request, WN = works standard

DB-072_HEKO_Kettenraeder_verzahnt_DE-EN | 26. Aug. 2020, 13:52 | © HEKO Ketten GmbH | Protected by copyright. All rights and changes reserved.

HEKO GROUP
CONVEYOR SOLUTIONS

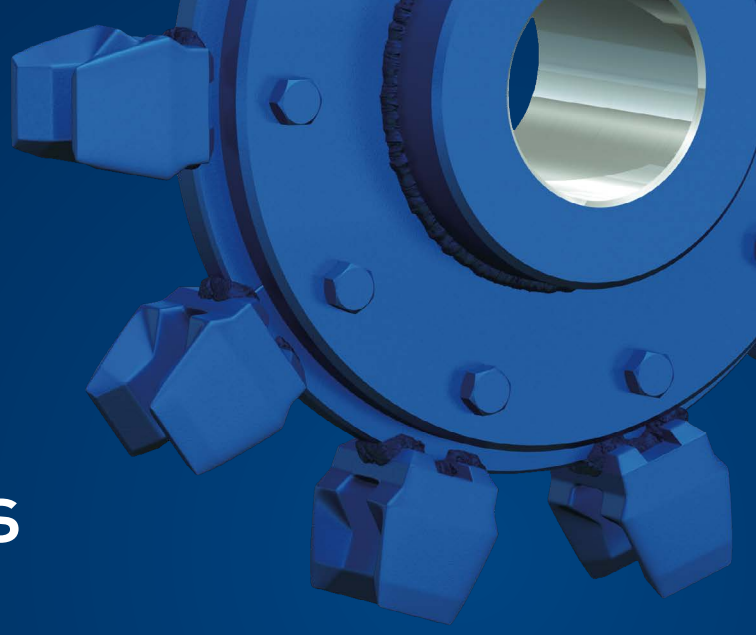

HEKO chain wheels with teeth

HEKO chain wheels, pocket teeth, multi-parted, steel, interchangeable type GTA

- Suitable for drive / reversing
- Long service life thanks to wear-resistant hardened chain contact points
- Bore and hub length according to customer requirements
- Use with chains according to DIN 764 and WN
- Reduced repair costs through interchangeable sprockets
- Use with special links, and some special solutions

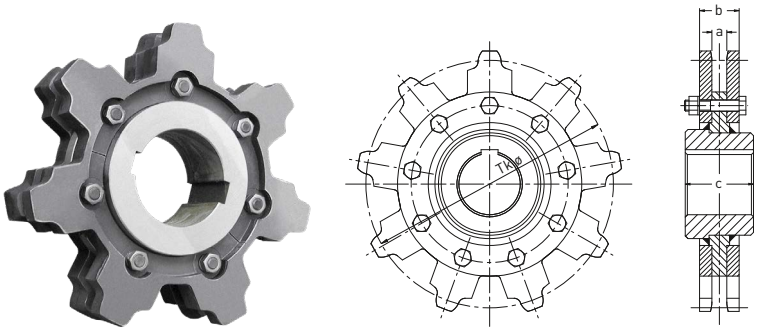

HEKO chain wheel type GTA, pocket toothed, interchangeable, hub made in welding design

pitch circle diameter (mm) Tk Ø	to suit chain, nominal x pitch (mm) d x t	DIN	Number of teeth	dimensions (mm) a	b	c	weight ca. (kg/each)
135	10 x 35	764	6	14	38	80	4
157	10 x 35	764	7	14	38	80	7
179	10 x 35	764	8	14	38	80	8
202	10 x 35	764	9	14	38	80	9
231	13 x 45	764	8	18	48	100	10
259	13 x 45	764	9	18	48	100	13
288	13 x 45	764	10	18	48	100	19
256	14 x 50	WN	8	18	48	100	15
288	14 x 50	WN	9	18	48	100	22
320	14 x 50	WN	10	18	48	100	24
216	16 x 56	764	6	21	57	100	13
252	16 x 56	764	7	21	57	100	17
287	16 x 56	764	8	21	57	100	21
323	16 x 56	764	9	21	57	100	32
358	16 x 56	764	10	21	57	100	38
247	16 x 64	WN	6	21	57	100	23
328	16 x 64	WN	8	21	57	100	31
369	16 x 64	WN	9	21	57	100	33
409	16 x 64	WN	10	21	57	100	39
243	18 x 63	764	6	23	63	120	17
283	18 x 63	764	7	23	63	120	27
323	18 x 63	764	8	23	63	120	30

pitch circle diameter (mm) Tk Ø	to suit chain, nominal x pitch (mm) d x t	DIN	Number of teeth	dimensions (mm) a	b	c	weight ca. (kg/each)
363	18 x 63	764	9	23	63	120	38
403	18 x 63	764	10	23	63	120	45
290	19 x 75	WN	6	23	63	140	25
384	19 x 75	WN	8	23	63	140	40
479	19 x 75	WN	10	23	63	140	47
574	19 x 75	WN	12	23	63	140	55
315	20 x 70	764	7	25	65	140	28
359	20 x 70	764	8	25	65	140	38
403	20 x 70	764	9	25	65	140	47
332	22 x 86	WN	6	27	73	140	43
386	22 x 86	WN	7	27	73	140	45
441	22 x 86	WN	8	27	73	140	55
550	22 x 86	WN	10	27	73	140	65
410	23 x 80	764	8	28	78	140	60
461	23 x 80	764	9	28	78	140	67
466	26 x 91	764	8	32	82	160	85
524	26 x 91	764	9	32	82	160	105
671	30 x 105	764	10	36	96	200	220
726	36 x 126	764	9	42	112	220	242

Other dimensions and qualities on request, WN = works standard

DB-072_HEKO_Kettenraeder_verzahnt_DE-EN | 26. Aug. 2020, 13:52 | © HEKO Ketten GmbH | Protected by copyright. All rights and changes reserved.

HEKO GROUP
CONVEYOR SOLUTIONS

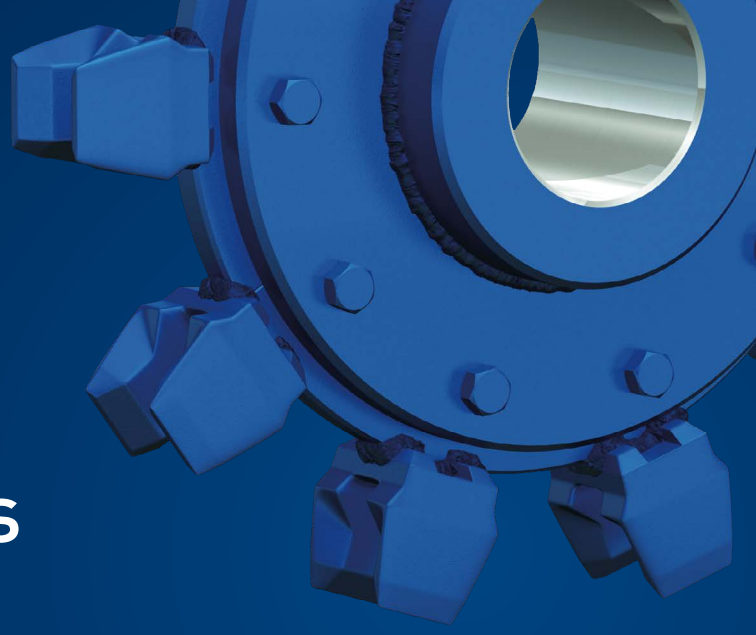

HEKO chain wheels with teeth

HEKO chain wheels, pocket teeth, one-parted, steel, type GTE

- Suitable for drive / reversing
- Long service life thanks to wear-resistant hardened chain contact points
- Bore and hub length according to customer requirements
- Use with chains according to DIN 764 and WN
- Reduced repair costs through interchangeable sprockets
- Use with special links, and some special solutions

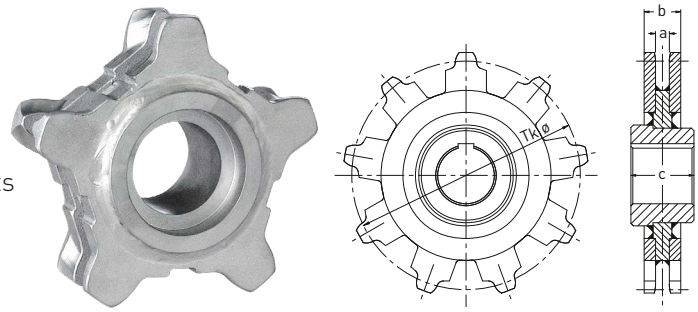

HEKO chain wheel type GTE, pocket toothed, one-parted in welding design

pitch circle diameter (mm) Tk Ø	to suit chain, nominal x pitch (mm) d x t	DIN	number of teeth	dimensions (mm) a	b	c	weight ca. (kg/each)
135	10 x 35	764	6	14	38	80	4
157	10 x 35	764	7	14	38	80	6
179	10 x 35	764	8	14	38	80	6
202	10 x 35	764	9	14	38	80	8
174	13 x 45	764	6	18	48	100	6
202	13 x 45	764	7	18	48	100	8
231	13 x 45	764	8	18	48	100	10
259	13 x 45	764	9	18	48	100	12
288	13 x 45	764	10	18	48	100	17
162	14 x 50	WN	5	18	48	100	5
193	14 x 50	WN	6	18	48	100	7
256	14 x 50	WN	8	18	48	100	14
288	14 x 50	WN	9	18	48	100	20
320	14 x 50	WN	10	18	48	100	21
181	16 x 56	764	5	21	57	100	8
216	16 x 56	764	6	21	57	100	11
252	16 x 56	764	7	21	57	100	15
287	16 x 56	764	8	21	57	100	19
323	16 x 56	764	9	21	57	100	31
358	16 x 56	764	10	21	57	100	37
247	16 x 64	WN	6	21	57	100	22
328	16 x 64	WN	8	21	57	100	30
369	16 x 64	WN	9	21	57	100	32
409	16 x 64	WN	10	21	57	100	38
243	18 x 63	764	6	23	63	120	15
283	18 x 63	764	7	23	63	120	25

pitch circle diameter (mm) Tk Ø	to suit chain, nominal x pitch (mm) d x t	DIN	number of teeth	dimensions (mm) a	b	c	weight ca. (kg/each)
323	18 x 63	764	8	23	63	120	30
363	18 x 63	764	9	23	63	120	35
403	18 x 63	764	10	23	63	120	43
290	19 x 75	WN	6	23	63	140	30
384	19 x 75	WN	8	23	63	140	40
479	19 x 75	WN	10	23	63	140	45
574	19 x 75	WN	12	23	63	140	52
315	20 x 70	764	7	25	65	140	27
359	20 x 70	764	8	25	65	140	37
403	20 x 70	764	9	25	65	140	45
332	22 x 86	WN	6	27	73	140	45
386	22 x 86	WN	7	27	73	140	50
441	22 x 86	WN	8	27	73	140	55
550	22 x 86	WN	10	27	73	140	62
259	23 x 80	764	5	28	78	140	40
360	23 x 80	764	7	28	78	140	45
410	23 x 80	764	8	28	78	140	55
461	23 x 80	764	9	28	78	140	65
374	26 x 73	766	8	32	82	160	65
409	26 x 91	764	7	32	82	160	75
524	26 x 91	764	9	32	82	160	90
272	30 x 84	766	5	36	96	200	55
377	30 x 84	766	7	36	96	200	70
431	30 x 84	766	8	36	96	200	80
671	30 x 105	764	10	36	96	200	180
454	36 x 101	766	7	42	112	200	185

Other dimensions and qualities on request, WN = works standard

DB-072_HEKO_Kettenrauder_verzahnt_DE-EN | 26. Aug. 2020, 13:52 | © HEKO Ketten GmbH | Protected by copyright. All rights and changes reserved.

HEKO GROUP
CONVEYOR SOLUTIONS

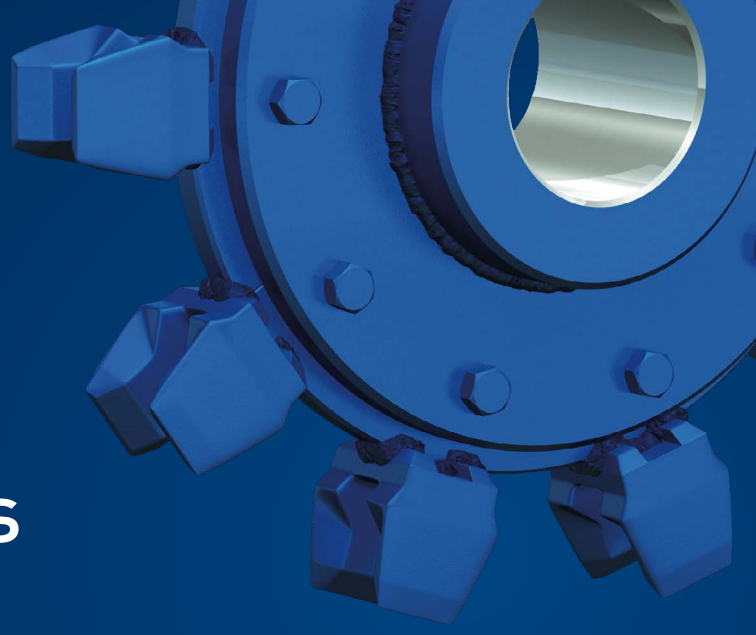

HEKO chain wheels with teeth

HEKO chain wheels, pocket teeth, multi-parted, steel, interchangeable type RTS

- Suitable for drive under the highest loads
- Long service life thanks to wear-resistant hardened chain contact points
- Interchangeable, highly wear-resistant tooth segments
- Adaptable to the respective chain wear
- Can be adapted to existing sprocket hubs

HEKO chain wheel type RTS

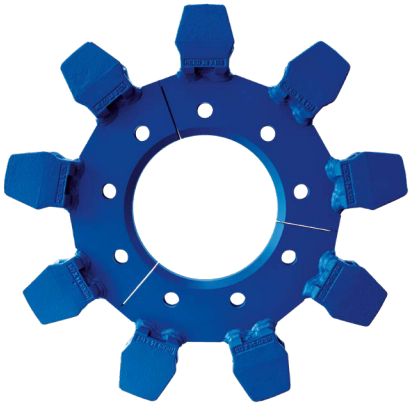

HEKO pocket disc type RTS

HEKO single pocket tooth type RTS

pitch circle diameter (mm) Tk ø	to suit chain, nominal x pitch (mm) d x t	DIN	number of teeth	dimensions (mm) a	b	c	weight ca. (kg/each)
441	22 x 86	WN	8	27	77	140	55
495	22 x 86	WN	9	27	77	140	72
550	22 x 86	WN	10	27	77	140	80
472	26 x 92	WN	8	33	85	160	85
530	26 x 92	WN	9	33	85	160	90
588	26 x 92	WN	10	33	85	160	110
554	30 x 108	WN	8	40	117	180	140
622	30 x 108	WN	9	40	117	180	170
690	30 x 108	WN	10	40	117	180	210
646	34 x 126	WN	8	44	120	220	205
726	34 x 126	WN	9	44	120	220	230
805	34 x 126	WN	10	44	120	220	260
697	34 x 136	WN	8	44	122	220	220
783	34 x 136	WN	9	44	122	220	245
869	34 x 136	WN	10	44	122	220	280

Other dimensions and qualities on request, WN = works standard

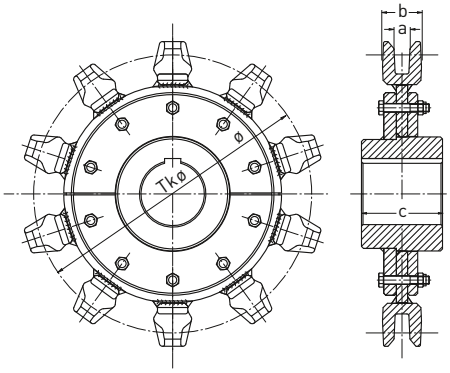

HEKO chain wheel type RTS, pocket toothed; interchangeable

DB-072_HEKO_Kettenraeder_verzahnt_DE-EN | 26. Aug. 2020, 13:52 | © HEKO Ketten GmbH | Protected by copyright. All rights and changes reserved.

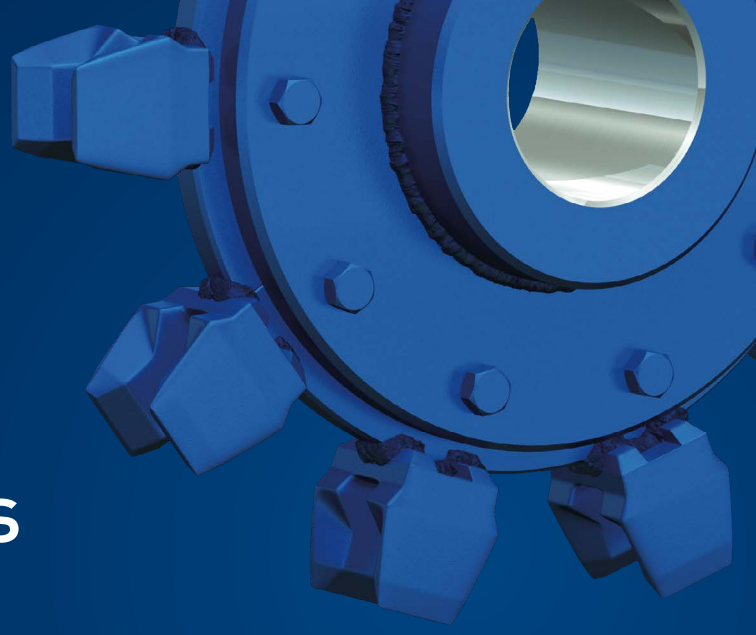

HEKO chain wheels with teeth

HEKO sprockets with pocket teeth in cast steel version, one-piece, type GSE

- Suitable for drive / reversing
- Long service life thanks to wear-resistant hardened chain contact points
- Bore and hub length after customer request (depending on model)
- Use with chains according to DIN 764
- Use with special links and some special solutions

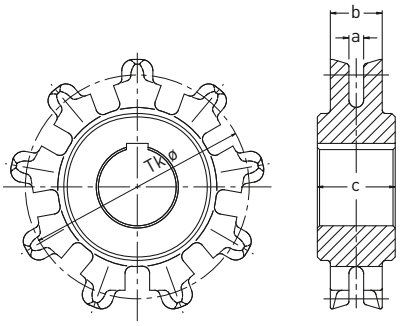

HEKO chain wheel type GSE one-parted pocket toothed in cast steel version

pitch circle diameter (mm) Tk Ø	to suit chain, nominal x pitch (mm) d x t	DIN	drawing number	number of teeth	dimensions (mm) a	b	c	weight ca. (kg/each)
179	10 x 35	764	KR 2443	8	13	51	60	8
259	13 x 45	764	KR 4073	9	17	60	90	22
345	13 x 45	764	KR 2350	12	17	63	100	30
243	18 x 63	764	KR 1811	6	22	75	100	24
283	18 x 63	764	KR 1826	7	22	68	90	27
323	18 x 63	764	KR 2028	8	22	75	100	36
363	18 x 63	764	KR 2290	9	22	75	100	41

Other dimensions and qualities on request.

DB-072_HEKO_Kettenraeder_verzahnt_DE-EN | 26. Aug. 2020, 13:52 | © HEKO Ketten GmbH | Unbeschadet bestehender Ansprüche und Rechte vorbehalten.